Vector Fields

Dr. Roy Lisker

Wesleyan University Physics Dept Seminar

April 20, 2005

In the literal sense a vector field V over a manifold M is simply the assignment of a vector quantity of the same dimension as the manifold to every point of M. Although a gradient is, strictly speaking, a "co-vector" rather than a vector, in situations in which the transformations of a vector space and its dual coincide, (as is the case with Euclidean n-spaces), the gradient of a function of n-variables , $\boxed{\nabla f(x_1, x_2, \ldots x_n) = (f_{x_1}, f_{x_2}, \cdots f_{x_n})}$ **, is a good example of a vector field in this sense.**

Vector Fields in Relativity and Dynamical Systems however use the expression in a specific way. It is assumed that this audience has a fairly good idea of what a manifold is. An n-dimensional connected manifold M, is a topological space, usually some surface in a Euclidean space, whose local properties, up to some derivative, are identical to those of Euclidean n-space. More precisely, one can cover M with coordinate patches in such a way, that each patch is diffeomorphic to a region of n-space. and to each other in the areas of overlap. Example: the 3-sphere is locally diffeomorphic to the flat plane, but one has to cover the sphere with at least 2 coordinate patches, (say one including the North Pole, the other the South Pole with overlap at the equator) in setting up coordinates for the entire surface.

However it will be quite satisfactory, for the purposes of this introductory lecture, to take as our manifold any region of n-dimensional Euclidean space. Most of our examples will go no further than the flat plane, while there are interesting things to be said even about the 1-dimensional straight line.

For most of the applications to physics, one usually requires that the vector field be differentiable or, as they say , *smooth* . However this condition can be relaxed when needed to require that the field satisfy a *Lipschitz condition* . We will return to this at the end of the lecture.

Although there is no apriori reason why a vector field should not be totally random, or densely discontinuous, or even singular with several vectors emanating from a single point, the reason one requires the field V to be smooth and non-singular is that one is interested in studying *flows* , F, which are the envelopes of vector fields. A flow is a *fibration* of the manifold M into 1-dimensional non-intersecting sub-manifolds which do not terminate in singularities and do not intersect. A singular point of a vector field in this sense is therefore one that interferes with the action over a flow.

Definition: A singular point of a vector field V over a manifold M is one at which, either:

(1) The field is multi-valued, i.e., several vectors attached to the same point; or

(2) The field is discontinuous. (or more generally is not Lipschitz). This means that one or more of the equations for the vector components in terms of the coordinates:

$$\boxed{\begin{array}{l} v = (v_1, \ldots v_n); \\ v_j = f(x_1, \ldots, x_n); j = 1, 2, \ldots n \end{array}}$$

has a discontinuity at that point. This condition can be weakened in general when it is required only that the directions, (that is to say the sets of direction cosines), of the vector be continuous, and not the lengths.

(3) All of the components at a certain point are 0. When that happens there is no motion, and no direction in which motion can take place.

Flows

The important thing to remember is that the fibration F of M into flow lines is a function only of the directions and not of the lengths of the vectors of a vector field. This is best illustrated by an example:

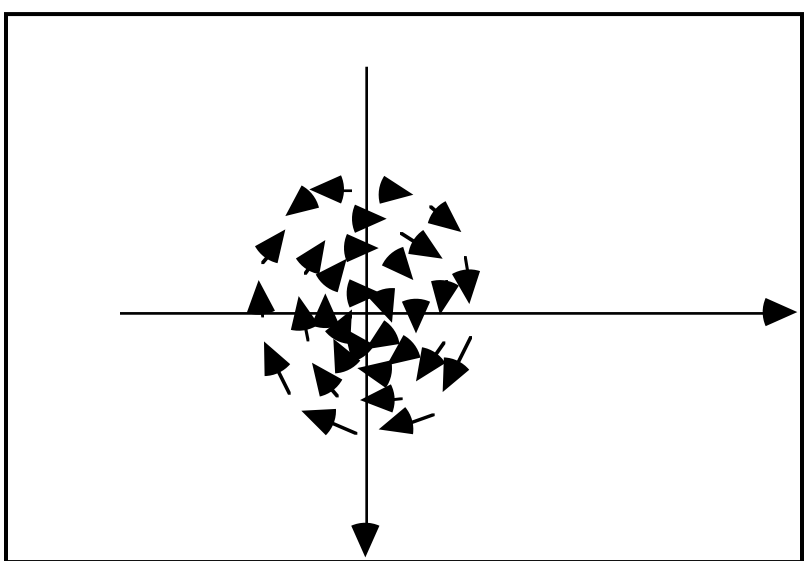

Figure 1

This diagram attempts to capture the notion of the vector field of the rotation of the plane in a counter-clockwise fashion about the origin. All of the vectors are, in theory, tangents to a circle about the origin:

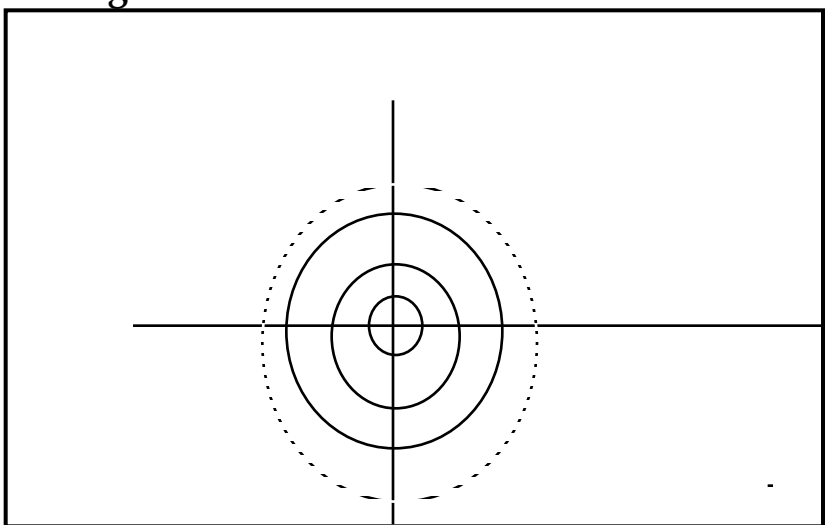

Figure 2

Observe that the *lengths* of the tangent vectors do not influence the pattern of integral curves, that is to say the collection of circles about the origin. If the lengths in Figure 1 were doubled, the circles in figure 2 would remain unchanged. The example chosen is particularly simple, but the result is true for any vector field in which the vectors are to be interpreted as tangent lines to a collection of integral curves, or flow.

What then, has happened to the lengths? Are they simply discarded. The answer is no. As we will show presently, the lengths of the vectors in V measure the "speed" at which a process or action flows through the integral curves. A concept of speed entails a concept of time, and, as we shall see, a vector field actually "creates" its own time!

A Classical Theorem from Differential Topology

It is not possible to construct a vector field on the sphere which is completely free of singular points. This is essentially a theorem in topology, proven in any text on Differential Topology

Creating Time

By asserting that a vector field creates its own time I do not want to be charged with a descent into wild metaphysics - not right away. Once again the situation is best illustrated by restricting ourselves to vector fields on the plane, or R^2 .

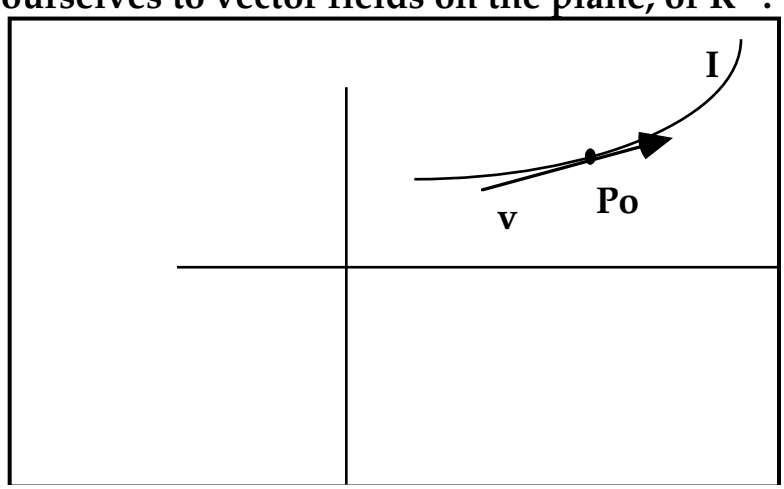

I is an integral curve of the vector field V. p_0 is an initial point
=(x_0, y_0) and v a vector of V through that point. If the components of the elements of V are given by pairs of functions $\boxed{(v_1, v_2) = (\xi^1(x,y), \xi^2(x,y))}$ **, then by elementary calculus, the equation of the curve I is given by the differential equation:**

$$\boxed{dy/dx = \frac{\xi_2}{\xi_1}}$$

combined with the initial condition $p_0 = (x_0, y_0)$. If the functions $\boxed{\xi_1, \xi_2}$ both be multiplied by the same function f(x1,x2) , this will not affect the value of the derivative above, nor the shape of the integral curve.

What happens then, when we introduce a parameter ε that separates the derivative into two expressions, one for x the other for y ? .

$$\boxed{\begin{aligned} dx/d\varepsilon &= \xi_1 \\ dy/d\varepsilon &= \xi_2 \end{aligned}}$$

The two components of the tangent vector now become dependent variables on a new parameter introduced indirectly in the solution of the differential equations relating them to the integral curves! The monotonic increase of ε may be seen as a kind of flow through "time" over the entire plane. The technique, which is closely related to the method of Lagrangian multipliers for the solution of equations of motion subject to constraints, is quite general and can automatically be extended to n dimensions. Indeed it is customary to define a vector field as a system of first order ordinary differential equations , whose derivatives are all with respect to the variable t, or time:

$$\boxed{\begin{aligned} dx_1/dt &= \xi_1(x_1,\ldots,x_n) \\ dx_2/dt &= \xi_2 \\ \ldots \\ dx_n/dt &= \xi_n \end{aligned}}$$

For the moment we will continue to use the letter ε so as not to confuse it with time.

An illustrative example is in order at this point. Let

$$\boxed{\begin{aligned} \xi^x(x,y) &= -y \\ \xi^y(x,y) &= x \\ dx/d\varepsilon &= -y \\ dy/d\varepsilon &= x \end{aligned}}$$

Multiplying the first equation by x, the second by y, we see that

$$\boxed{x\, dx/d\varepsilon + y\, dy/d\varepsilon = 0 = \tfrac{1}{2}\, d(x^2+y^2)/d\varepsilon}$$

Integrating one has

$$\boxed{x^2 + y^2 = Const. = r^2}$$

This are the basic vector field equations , in other words, for the fibration by concentric circles around the origin given in the previous example. Fix r and an "initial value" point on the circle of radius r, $p_0 = (x_0, y_0)$. Then:

$$y = \sqrt{r^2 - x^2}$$

$$dx/d\varepsilon = -y = -\sqrt{r^2 - x^2}$$

$$\varepsilon = -\int \frac{dx}{\sqrt{r^2 - x^2}} = \cos^{-1}(x/r) + c_0$$

$$\therefore x = \cos(\varepsilon - c_0) = r\cos(c_0)\cos\varepsilon + r\sin(c_0)\sin\varepsilon$$

$$= x_0 \cos\varepsilon + y_0 \sin\varepsilon$$

$$y = \sin(\varepsilon - c_0) = -x_0 \sin\varepsilon + y_0 \cos\varepsilon$$

We have derived the classical equations for rotations in the Euclidean Plane.

Existence and Uniqueness Theorems

Classical existence and uniqueness theorems show that a system of first-order vector field equations will always have a unique solution under very general conditions. The following statement, with slightly modified notation, is taken from a text available in the Science Library, entitled "Ordinary Differential Equations", Morris Tenenbaum and Harry Pollard, Harper and Row, 1963, page 764:

Let $\boxed{\xi_1, \xi_2, \ldots \xi_n}$ be functions in a region S surrounding a point ($\boxed{x_1, x_2, \ldots x_n}$) of a manifold M which, in addition to being continuous, satisfy a *Lipschitz Condition* of the form:

$$\left|\xi_1(x_1', \ldots x_n') - \xi_1(x_1'', \ldots x_n'')\right| + \left|\xi_2(x_1', \ldots x_n') - \xi_2(x_1'', \ldots x_n'')\right|$$
$$+ \left|\xi_n(x_1', \ldots x_n') - \xi_n(x_1'', \ldots x_n'')\right| \le N\{\left|x_1' - x_1''\right| + \left|x_2' - x_2''\right| + \ldots + \left|x_n' - x_n''\right|\}$$

where N is some upper bound, for all points x' and x'' in S.

Then a solution of this system of equations exists over in the region S and that solution is unique.

These theorems guarantee the existence of a flow, F, over S, a fibration by integral curves I passing through every point p = (x_1 , x_2,...x_n) without intersections between them. Taking any point $\boxed{x^0 = (x_1^0, x_2^0, \ldots x_n^0)}$ as an initial condition, the variable ε will determine *parametric equations* for the movement of a point along the integral curve I_0 passing through that point. The equation for the flow F over S can be written as:

$$\boxed{x = \Psi(\varepsilon, x^0)}$$

Since "x" is an abbreviation for n distinct variables, so there are n distinct functions in the flow. In the example given above, one sees that:

$$\boxed{\Psi(\varepsilon, x^0) = (\psi_1, \psi_2) = (x_0 \cos\varepsilon + y_0 \sin\varepsilon, y_0 \cos\varepsilon - x_0 \sin\varepsilon}$$

The Exponential Property

Ψ turns out to have a remarkable property which causes it to behave very much like an exponential:

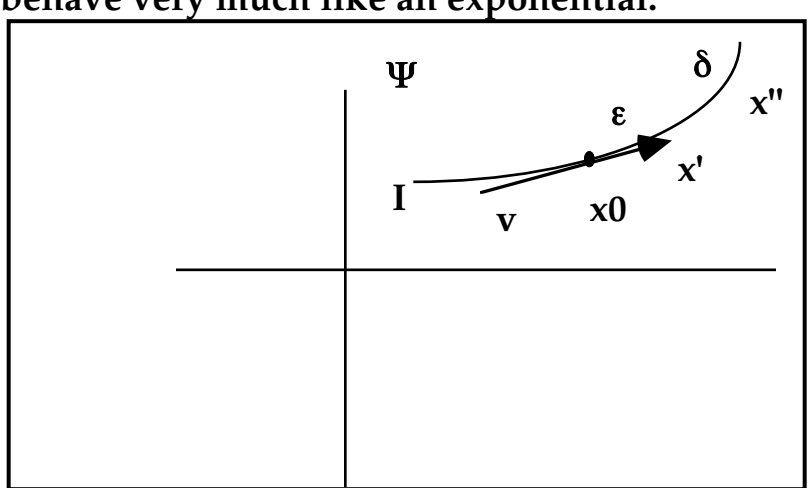

Figure 3

In Figure 3, the point x' is obtained from x0 by moving the parameter an amount ε . In other words $x' = \Psi(\varepsilon, x^0)$

The point x'' is likewise obtained from x' by moving the parameter by an amount δ : x''=Ψ(ε , x'). It can be shown that in the motion from x^0 to x'', one simply adds the increments ε + δ. That is to say:

Theorem:

$$\boxed{\Psi(\varepsilon,\Psi(\delta,x^0)) = \Psi(\varepsilon+\delta,x^0)}$$

The composition of increments of a flow along an integral curve is equal to that obtained through the addition of the increments of the parameter.

The flow equations therefore behave very much like an exponential function. For example, consider the flow:

$$\boxed{\Psi(\varepsilon,x^0)) = x^0 e^{\varepsilon}}$$

If $x'=x^0e^{\varepsilon}$, then

$$\boxed{\begin{aligned}&\Psi(\delta,x') = \Psi(\delta,\Psi(\varepsilon,x')) = (x^0e^{\varepsilon})e^{\delta} = x^0e^{\varepsilon+\delta}\\ &= \Psi(\varepsilon+\delta,x^0)\end{aligned}}$$

Obviously, not every function of the variables ε , x0 can qualify as a flow. Structurally, flows are characterized by 3 properties:

$\boxed{I.\forall x\Psi(0,x^0) = x^0}$**. The parameter is set to 0 at the initial point.**

$$II.\Psi(\varepsilon,\Psi(\delta,x^0)) = \Psi(\varepsilon+\delta,x^0)$$

The exponential property

$\boxed{III.\dfrac{d\Psi(\varepsilon,x^0)}{d\varepsilon} = {dx}/{d\varepsilon} = \xi(x)}$ **The differential system for a vector field.**

Proving the Exponential Property

We will prove the exponential property for a 1-dimensional flow, (along the x-axis). Then we will indicate two methods by which it can be proven for n-dimensional flows.

For a 1-dimensional flow, the vector field V is defined by a single equation:

$\boxed{dx/d\varepsilon = \xi(x)}$. Solving for ε ,

$$\boxed{\begin{aligned} &d\varepsilon = \xi(x) \\ &\varepsilon = \int \frac{dx}{\xi(x)} = E(x) + C, \end{aligned}}$$

where C is a constant of integration. Since the parameter is set to 0 at the initial point, one has $E(x^0) + C = 0$, or $C = -E(x^0)$

Therefore:

$\varepsilon = E(x) - E(x^0)$. Solving for x:

$$\boxed{x = E^{-1}(\varepsilon + E(x^0)) = \Psi(\varepsilon, x^0)}$$

We take this expression and put it into the format of the exponential property:

$$\boxed{\begin{aligned} &\Psi(\delta, \Psi(\varepsilon, x^0)) = \Psi(\delta, x) \\ &= E^{-1}(\delta + E(E^{-1}(\varepsilon + E(x^0)) \\ &= E^{-1}((\delta + \varepsilon) + E(x^0)) \\ &= \Psi(\delta + \varepsilon, x^0) \end{aligned}}$$

In the general case of n-dimensions, a combination of the existence and uniqueness theorems, and the implicit function theorem at a non-singular point allow one, in some neighborhood of x, to take one variable, say x_1 , and express every other variable

in terms of it. This reduces the n-dimensional case to that of a single dimension.

The following proof is found in "Applications of Lie Groups to Differential Equations" Peter J. Olver, Springer-Verlag, 1986:

Let:

$$\boxed{\begin{aligned} F_1(\varepsilon) &= \Psi(\varepsilon, \Psi(\delta, x^0)) \\ F_2(\varepsilon) &= \Psi(\varepsilon + \delta, x^0) \end{aligned}}$$

where δ and x^0 are considered constants. Then $F_1(0) = F_2(0)$ by condition I for a flow.

Also $\boxed{F_1'(\varepsilon) = F_1'(\varepsilon) = \xi(\Psi(\delta, x^0))}$ at the point $\varepsilon = 0$.

Therefore, since the solution is unique they must be equal(!)

Finally, here is an example of a flow which uses no exponentials, but which obeys the exponential property:

Let $\boxed{\Psi(\varepsilon,(x^0, y^0)) = (\frac{x^0}{1-\varepsilon x^0}, \frac{y^0}{1-\varepsilon x^0})}$

Then:

$$\boxed{\begin{aligned} &\Psi(\varepsilon, \Psi(\delta,(x^0, y^0)) = \\ &\Psi(\varepsilon,(\frac{x^0}{1-\delta x^0}, \frac{y_0}{1-\delta x^0}) \\ &= (\frac{\frac{x^0}{1-\delta x^0}}{1-\varepsilon\frac{x^0}{1-\delta x^0}}, \frac{\frac{y_0}{1-\delta x^0}}{1-\varepsilon\frac{x^0}{1-\delta x^0}}) \\ &= (\frac{x^0}{1-(\delta+\varepsilon)x^0}, \frac{y^0}{1-(\delta+\varepsilon)x^0}) \\ &= \Psi(\delta+\varepsilon, x^0) \end{aligned}}$$

This flow corresponds to the vector field:

#13...

$$\boxed{\begin{array}{l} \xi^x = x^2 ; \xi^y = xy \\ \\ dy/dx = \dfrac{\xi^y}{\xi^x} = y/x \\ y = kx \end{array}}$$

where k is an arbitrary constant. The flow is the pencil of straight lines passing through the origin. Observe that one can divide through by x in the expression for both components of the vector field and obtain the same flow.

❄❄❄❄❄❄❄❄❄❄❄❄
❄❄❄❄❄❄❄❄❄❄❄❄